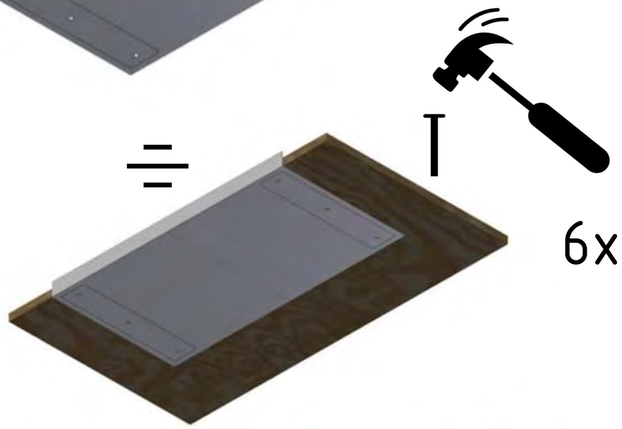

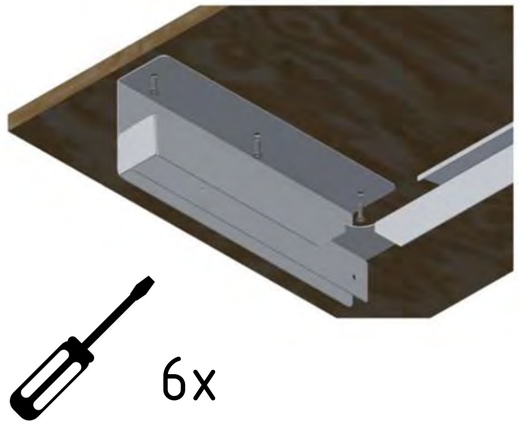

fold here